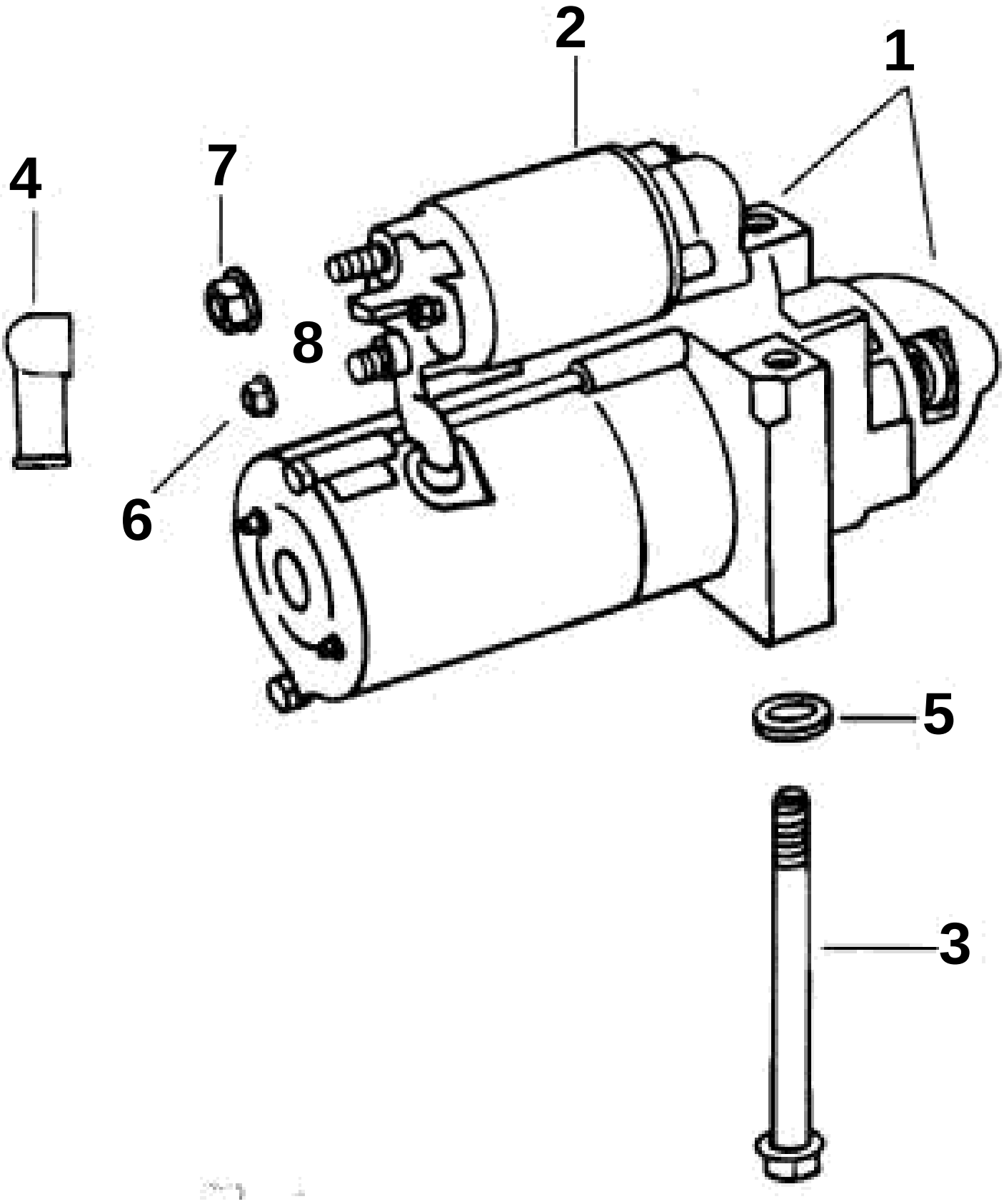
2
1
4
7
8
6
5
3

STARTER MOTOR

REF	PART NO.	QTY	DESCRIPTION
1	3854751	1	Starter motor
2	3850216	1	· Solenoid
3	3854752	2	Screw, Starter
4	3852487	1	Protective cap, Battery cable
5	3854496	2	Washer, Starter mounting
6	3852518	2	Nut, Starter solenoid
7	3853714	1	Nut, Starter solenoid
8	3852520	2	Washer, Solenoid